CYCLONE 800 (2016 +)

FRAME PARTS

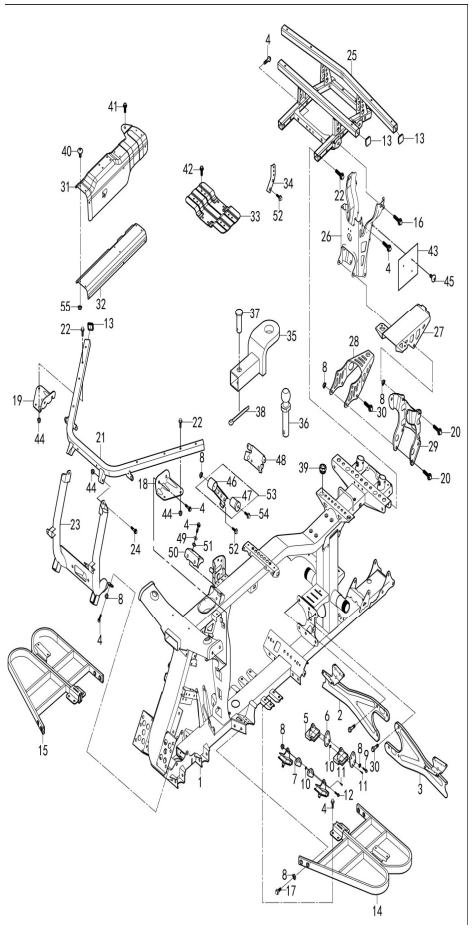

NO.	PART NO. (NEW)	PART NO. (OLD)	DESCRIPTION	Q'TY	PRICE	NOTE
1	P118000511000000	5110A-118-0000	Frame Joint Parts	1		
2	P118000515430000	5416A-118-0000	Right Foot Pedal Bracket I	1		
3	P118000515420000	5419A-118-0000	Left Foot Pedal Bracket I	1		
4	BGB16674-M10×1.25×20	B06-M10×1.25×20-57	Hexagon Flange Bolt M10×1.25×20	24		
5	P1150000070A0000	5430A-115-0000	Engine Front Suspension Bracket	4		
6	P118000002200000	5431A-118-0000	Engine Suspension Support II	2		
7	P118000002100000	5430A-118-0000	Engine Suspension Support I	2		
8	BGB6187-M10×1.25	B10-M10×1.25-27	Hexagon Flange Locked Nut M10×1.25	17		
9	BGB16674-M10×1.25×25	B06-M10×1.25×25-57	Hexagon Flange Bolt M10×1.25×25	2		
10	BGB6187-M6	B09-M6-27	Hexagon Flange Locked Nut M6	4		
11	BGB16674-M6×25	B05-M6×20-57	Hexagon Flange Bolt M6×25	4		
12	BGB16674-M10×1.25×185	B06-M10×1.25×185-57	Hexagon Flange Bolt M10×1.25×185	1		
13	PJ00000924020100	82021-112-0003	Front bumper Plug 30×30	6		
14	P118000515450000	5417A-118-0000	Pedal Comb.(R) II	1		
15	P118000515440000	5418A-118-0000	Pedal Comb.(L) II	1		
16	BGB16674-M10×1.25×45	B06-M10×1.25×45-57	Hexagon Flange BoltM10×1.25×45	2		
17	BGB16674-M10×1.25×25	B06-M10×1.25×25-57	Hexagon Flange Bolt M10×1.25×25	8		
18	P118000721120000	72181-118-0000	Front connecting plate(R)	1		
19	P118000721130000	72182-118-0000	Front connecting plate(L)	1		
20	BGB16674-M10×1.25×135	B06-M10×1.25×135-57	Hexagon Flange Bolt M10×1.25×135	4		
21	P118000515340000	7371A-118-0000	Front Carrier Support	1		
22	BGB16674-M8×45	B05-M8×45-57	Hexagon Flange Bolt M8×45	8		
23	P118000513030000	7372A-118-0000	Front Bumper Support Comb.	1		
24	BGB16674-M8×16	B05-M8×16-57	Hexagon Flange Bolt M8×16	2		
25	P118000515070000	7215A-118-0000	Rear Mudguard Bracket	1		
26	P118000516010000	54676-118-0000	Rear Axle Upper Mounting Plate II	1		
27	P118000515560000	32236-118-0000	Bracket for battery box	1		
28	PJ00000519101300	7234A-118-0000	Hitch Joint A	1		
29	P118000515600000	54677-118-0000	Rear Axle Upper Mounting Plate I	1		
30	BGB16674-M10×1.25×22	B06-M10×1.25×22-57	Hexagon Flange bolt M10×1.25×22	8		
31	P118000182030000	17205-118-0000	Shield Iii,Muffler Tube	1		
32	P118000182040000	17207-118-0000	Exhaust pipe shield IV	1		
33	P118000516400000	72404-118-0000	Mounting Board, Seat	1		
34	P118000516650000	51391-118-0000	Cable Fixing plate	1		
35	PJ00000519100700	7235A-116-0000	Hitch Bar Connector	1		
36	PJ00000519300000	72310-103-0000	Hitch Ball A	1		
37	PJ00000929700900	90694-107-0010	Step Pin φ15.8×75	1		
38	PJ00000908050010	73382-120E-0000	R Type Pin B	1		
39	PJ00000933400000	94011-118-0000	Florist Type Rubber Ring	2		
40	PJ00000905200400	90542-103-0002	Cross Large Plate Head Screw M6×12	1		
41	BGB16674-M6×16	B05-M6×16-57	Hexagon Flange Bolt M6×16	1		
42	BGB16674-M8×16	B05-M8×16-57	Hexagon Flange Bolt M8×16	1		
43	P118000515210000	32221-118-0000	Press Plate, Battery	1		
44	BGB6187-M8	B09-M8-27	Hexagon Flange Locked Nut M8	4		
45	PJ00000905200000	90542-102-0007	Cross small Plate Head Screw M5×12	6		
46	P118000002300000	5434A-118-0000	Upper Engine Suspension III	1		
47	PJ000000040A0100	94023-103-0000	Damping Knot, Engine	1		
48	P118000516560000	54606-118-0000	Mounting Board, Voltage Regulator	1		
49	BGB93-10	B01-10-B7	Spring Washer 10	2		
50	P212001516990000		Steering Stem Bracket	1		
51	BGB97.1-10	B04-10-B7	Plain washer 10	2		
52	BGB16674-M10×1.25×16	B06-M10×1.25×16-57	Hexagon Flange Bolt M10×1.25×16	2		
53	P1180000080A0000		Hang Comp,Engine	1		
54	BGB16674-M10×1.25×75	B06-M10×1.25×75-57	Hexagon Flange Bolt M10×1.25×75	1		
55	BGB6187-M6	B09-M6-27	Hexagon Flange Locked Nut M6	4		

ALL RIGHTS RESERVED
NORDIK MOTOR CANADA

ELECTRONIC PARTS

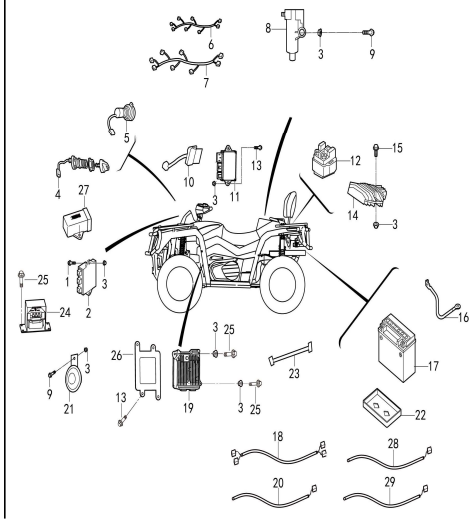

NO.	PART NO. (NEW)	PART N0. (OLD)	DESCRIPTION	Q'TY	PRICE	NOTE
1	BGB16674-M6×16	B05-M6×16-57	Hexagon Flange Bolt M6×16	2		
2	P115H00377300000	37700-115H-0000	Relay Assy(EFI)	1		
3	BGB6187-M6	B09-M6-27	Hexagon Flange Locked Nut M6	12		
4	P107000372000000	37200-107-0000	Ignition Switch Assy	1		
5	P115000371750000	32310-107-0000	Dc Socket	1		
6	P118000341000001	34100-118-0000	Main Cable Assy.	1		
7	P118000342000000	34200-118-0000	EFI Cable	1		
8	P116000331000000	33100-116-0000	Ignition Coil	1		
9	BGB16674-M6×40	B05-M6×40-57	Hexagon Flange Bolt M6×40	4		
10	P107000346200000	37850-102-0000	Flasher	1		
11	PJ00000392000000	39200-116-0000	ECU controller assy	1		
12	P115000377050000	37710-115-0000	Starter Relay	1		
13	BGB16674-M6×20	B05-M6×20-57	Hexagon Flange Bolt M6×20	6		
14	P116000321000000	32100-116-0100	Rectifier/Voltage regulator	4		
15	BGB16674-M6×25	B05-M6×25-57	Hexagon Flange Bolt M6×25	2		
16	P118000343200000	34160-118-0000	Negative Cable, Battery	1		
17	P107000322000000	32200-107-0000	Battery	1		
18	P118000343800000	73104-118-0000	Winch Motor Cable	1		
19	P212001623500000	38300-125-0000	Power Steering Controller	1		
20	P118000344000000	73106-118-0000	Battery Cable,Winch	1		
21	P115000346IA0000	34500-115-0000	Horn Assy.	2		
22	PJ00000934100000	94124-118-0000	Rubber Washer,Battery	1		
23	PJ00000932300100	94052-118-0000	Cable ties 265	1		
24	P115000377400000	73105-115-0000	Winch Relay	1		
25	BGB16674-M6×16	B05-M6×16-57	Hexagon Flange Bolt M6×16	6		
26	P212001517450000	62850-125-0000	Mountingplate, EPS	1		
27	P116000377350000	37770-117-0000	Main Relay Assy	1		
28	P118000331010000	33120-118-0000	Connecting Cable,Ignition Coil	1		
29	P118000331010100		Connecting Cable,Ignition Coil	1		
	P115000899130000		Insulator Plug(Positive Pole)	1		
	P115000899140000		Insulator Plug(Negative Pole)	1		

ALL RIGHTS RESERVED
NORDIK MOTOR CANADA

WATER COOLER

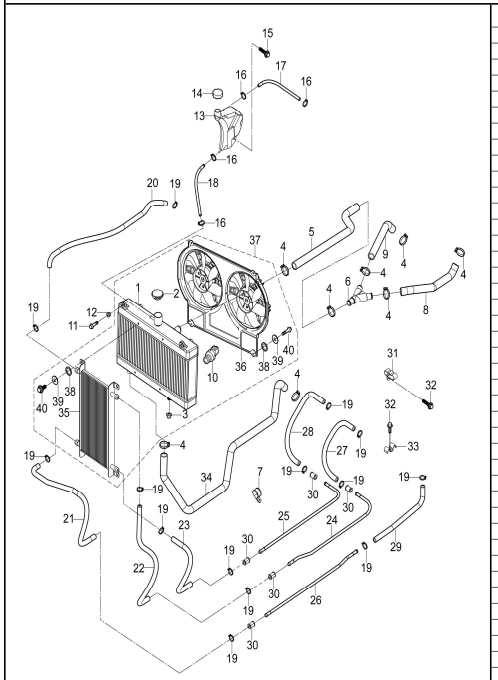

NO.	PART NO. (NEW)	PART N0. (OLD)	DESCRIPTION	Q'TY	PRICE	NOTE
1	P1180001926A0000		Water Tank	1		
2	P1070001927A0000	19203-115-0000	Water Tank Cover	1		
3	P103000192030000	53232-103-0000	Rubber Washer,Water Tank	2		
4	PJ00000907300300	90751-102-0002	Locking Hoop For Screw A	8		
5	P1180001901800000	19002-118-0000	Inlet Water Pipe III	1		
6	P1180001900200000	19003-010-0000	waterlogged T-pipe	1		
7	P1180001901300000	90771-116-0000	Stablizing Hoop, Water Pipe	1		
8	P1180001900100000	19003-118-0000	Water Inlet Pipe Ⅰ	1		
9	P1180001900300000	19004-118-0000	water inlet Ⅱ	1		
10	P1150003654000000	19206-115-0000	Water Temp Sensor	1		
11	BGB16674-M6×25	B05-M6×25-57	Hexagon Flange Bolt M6×25	2		
12	BGB6187-M6	B09-M6-27	Hexagon Flange Locked Nut M6	2		
13	P1070001930000000	19040-107-0000	Secondary Water Tank	1		
14	P1070001931000000	19042-115-0000	Secondary Water Tank Cap	1		
15	BGB16674-M6×16	B05-M6×16-57	Hexagon Flange Bolt M6×16	2		
16	PJ00000907100200	90752-115-0001	Elastic Hoop C	3		
17	P1070001932200000	16514-107-0008	Outlet Pipe , Second Water Tank	1		
18	P1070001931300000	16514-112-0007	Water Inlet Pipe, Second Water Tank	1		
19	PJ00000907300000	90751-102-0001	Locking Hoop For Screw A	14		
20	P1180001550900000	15321-010-0000	Pressureproof Rubber Oil Pipe Ⅵ	1		
21	P1180001550800000	16512-112-0004	Pressureproof Rubber Oil Pipe Ⅴ	1		
22	P1180001550700000	16512-112-0004	Pressureproof Rubber Oil PipeⅣ	1		
23	P1180001550600000	16512-116-0005	Pressureproof Rubber Oil PipeⅢ	1		
24	P1180001551300000	19091-118-0000	Metal Oil PipeI	1		
25	P1180001551500000	19093-118-0000	Metal Oil PipeII	1		
26	P1180001551600000	19095-118-0000	Metal Oil Pipe Ⅲ	1		
27	P1180001550500000	15307-010-0000	Pressureproof Rubber Oil Pipe Ⅰ	1		
28	P1180001550400000	15307-010-0000	rubber fuel line Ⅰ	1		
29	P1180001551100000	15321-010-0000	Pressureproof Rubber Oil PipeⅦ	1		
30	P1150001551400000	19035-115-0000	fuel line rubber	8		
31	P1180004445900000	19031-118-0000	Clip I,Oil Pipe	2		
32	BGB16674-M6×16	B05-M6×16-57	Hexagon Flange Bolt M6×16	3		
33	P1150001901700000	19034-115-0000	fixing pipe clamp(M type)	1		
34	P1180001900400000	19001-118-0000	Outlet Pipe I	1		
35	P1180001552A0000		Oil Cooler	1		
36	P1180001924A0000		Cooling Fan	1		
37	P1180001920000000	19600-118-0000	Cooling water tank component	1		
38	BGB93-6-BA		Spring Wahser 6	8		
39	BGB97.1-6-BA		Plain Washer 6	8		
40	BGB5783-M6×18-BA		Hexagon Bolt M6×18	4		

ALL RIGHTS RESERVED
NORDIK MOTOR CANADA

LEFT HANDLEBAR

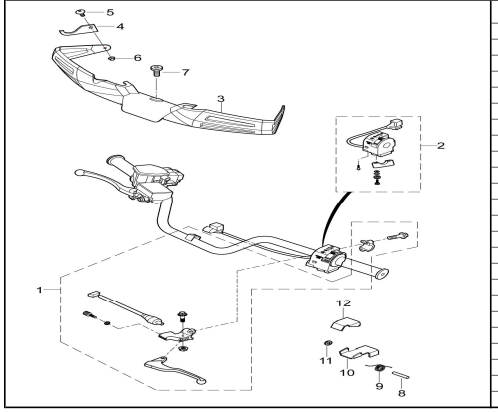

NO.	PART NO. (NEW)	PART N0. (OLD)	DESCRIPTION	Q'TY	PRICE	NOTE
1	P107000610010000	61040-107-0000	Left Lever Assy	1		
2	P107000374000000	37400-107F-0000	Left Switch Assy	1		
3	P118000825230000	61104-118-0000	Protective Cover ,Handlebar Pipe	1		
4	P118000621180000	61133-118-0000	Plate,Handlebar Pipe	2		
5	PJ00000905200500	90542-102-0003	Cross Large Plate Head Screw M6×16	2		
6	BGB6187-M6	B09-M6-27	Hexagon Flange Locked Nut M6	2		
7	PJ00000902250100	90161-101-0013	Socket Hexagon Screw M6×16	1		
8	P107000610070000	43332-107-0000	Breke Clip Pin	1		
9	PJ00000963000000	95082-107-0008	Torsional Spring φ1×φ6×69°	1		
10	P107000610080000	43335-107-0000	Breke Clip Front End	1		
11	BGB896-2	90753-107-0003	Circlip 2	1		
12	P107000610090000	43334-107-0000	Breke Clip	1		

ALL RIGHTS RESERVED
NORDIK MOTOR CANADA

STEERING BAR PART

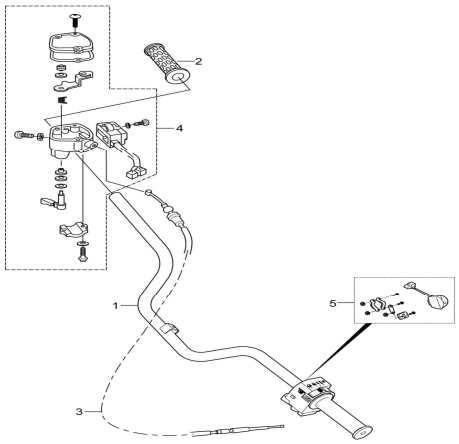

NO.	PART NO. (NEW)	PART N0. (OLD)	DESCRIPTION	Q'TY	PRICE	NOTE
1	P118000611010000	61101-118-0000	Handlebar Pipe	1		
2	P107000611040000	61107-102-0000	Handlebar Rubber Sleeve	2		
3	P300000610 3A0400	61030-118-0000	Accelerator Cable E	1		
4	P107000610210000	61070-107-0000	Accelerator Assy	1		
5	P107000899070000	73120-107-0000	Controller Switch, Winch	1		

ALL RIGHTS RESERVED
NORDIK MOTOR CANADA

STEERING STEM

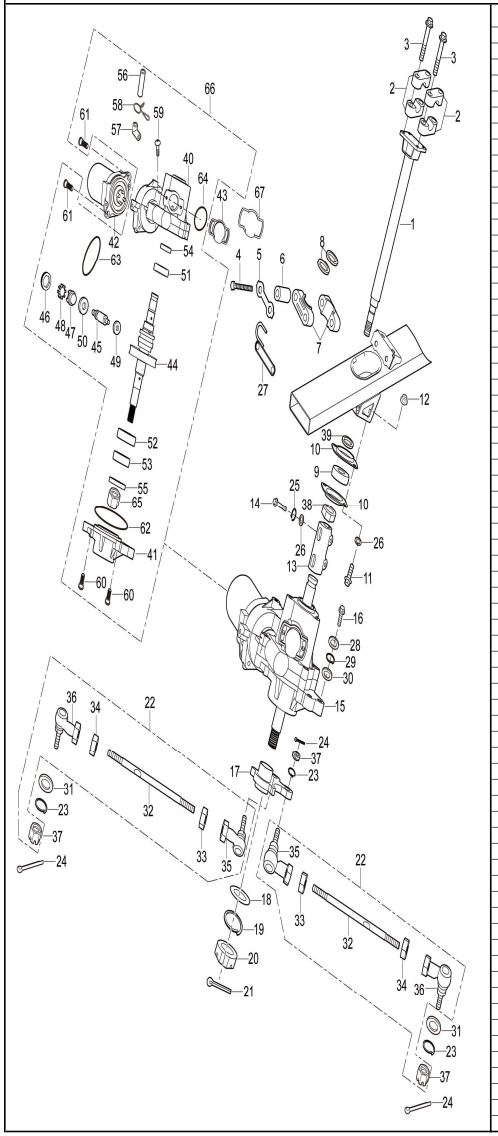

NO.	PART NO. (NEW)	PART N0. (OLD)	DESCRIPTION	Q'TY	PRICE	NOTE
1	P118000621100100	62130-118-0000	Steering Stem	4		
2	P103000610030000	61130-103-0000	Fix Bracket,Steering Stem	2		
3	BGB16674-M8×55	B05-M8×55-57	Hexagon Flange Bolt M8×55	2		
4	BGB5783-M8×60	B07-M8×60-57	Hexagon Bolt M8×60	1		
5	P107000610050000	53252-102-0000	Steering Stem Locking Clamp	1		
6	PJ0000092900 2100	90693-118-0007	Cylindrical Bush Φ9×Φ14×43.5	2		
7	P102000621220000	62142-102-0000	Supporting Block,Steering Stem	2		
8	PJ0000093390000	62148-102-0000	Seal Gasket,Steering Stem	1		
9	P118000913100000	91104-118-0001	UD Bearing	2		
10	P118000610060000	51392-118-0000	Bearing Pressure Plate	2		
11	BGB16674-M8×20	B05-M8×20-57	Hexagon Flange Bolt M8×20	2		
12	BGB6187-M8	B09-M8-27	Hexagon Flange Locked Nut M8	1		
13	P118000621400000	62811-118-0000	Steering Column Shaft Sleeve	2		
14	BGB16674-M8×35	B05-M8×35-57	Hexagon Flange Bolt M8×35	1		
15	P107F00622000000	62800-118-0000	Power Steering Parts	4		
16	BGB16674-M8×35	B05-M8×35-57	Hexagon Flange Bolt M8×35	1		
17	P118000621600000	6214A-118-0000	Rocker, Steering Stem	1		
18	BGB97.1-14	90691-118-0017	Plain washer 14	1		
19	BGB93-16	PB20-20-BB	Spring Washer-16	1		
20	BGB9459-M14×1.5	B11-M16×1.5-22	Hexagon Thin Slotted Nut M4×1.5	1		
21	BGB91-2.5×30	B12-2.5×30-W7	Cotter Pin 2.5×30	2		
22	P118000641100000	62510-118-0000	Shift Straight Rod Assy	2		
23	BGB93-10	B01-10-B7	Spring Washer 10	4		
24	BGB91-2×30	B12-2×30-W7	Cotter Pin 2×30	2		
25	BGB93-8	B01-8-B7	Spring Washer 8	2		
26	BGB97.1-8	B04-8-B7	Plain washer 8	4		
27	P107000610040000	62141-103-0000	Wire Hook,Steering Column	1		
28	BGB93-8	B01-8-B7	Spring Washer 8	4		
29	BGB97.1-8	B04-8-B7	Plain washer 8	4		
30	PJ0000093110000	54145-112-0003	Rubber Washerφ7×2.5	10		
31	BGB97.1-10	B04-10-B7	Plain washer 10	2		
32	P118000641110000		Steering Rod	2		
33	P107000641120000	62515-107-0000	Hexagon Nut(L)	2		
34	P107000641130000	62514-107-0000	Hexagon Nut(R)	2		
35	P107000641140000	62511-107-0000	Left Ball Joint	2		
36	P107000641150000	62512-107-0000	Right Ball Joint	2		
37	BGB9459-M10×1.25-C	B11-M10×1.25-21	Hexagon Thin Slotted Nut M10×1.25	4		
38	BGB6184-M22×1.5-H	B35-M22×1.5-5B	Hexagon Self-Lock Nuts M22×1.5	1		
39	PJ0000092900 5700		Bushing φ22×φ28×8	1		
40	P115H00624500000	62820-118-0000	Power Steering Parts	1		
41	P115H00162500000	62830-118-0000	Power Steering Seat	1		
42	P212001622500000	62840-118-0000	Power Steering Motor	1		
43	P107F00623000000	62841-117-0000	Power Steering Sensor	1		
44	P212001622050000		Turbo-Shaft	1		
45	P311001622060000		Worm	1		
46	P311001622070000		Inner Hexagon Half-Round Nut M30*1	1		
47	P311001622080000		Bulge Claw,Motor	1		
48	P311001622090000		Bulge Claw,Motor Rubber	1		
49	BGB276-608-Z		Deep Groove Ball Bearing 608-Z	1		
50	BGB276-1994-16001		Deep Groove Ball Bearing 16001	1		
51	BGB276-1994-6004	62638-120-0000	Deep Groove Ball Bearing 6004 -2RZ	1		
52	BGB276-1994-6205		Deep Groove Ball Bearing 6205	1		
53	BGB276-1994-16005		Deep Groove Ball Bearing 16005	1		
54	P311001622140000		Oil Seal φ20×φ30×8	1		
55	P311001622150000		Oil Seal φ27×φ47×7	1		
56	P311001622160000		Breather Pipe	1		
57	P311001622170000		Breather Pipe Head	1		
58	P311001622030000		Breather Pipe Hoop	1		
59	BGB823-M5×16-BA		Cross Plate Head Tapping Screw M5×16	2		
60	BGB70.2-M6×40-BA		Socket Hexagon Screw M6×40	4		
61	BGB70.2-M8×25-BA		Socket Hexagon Screw M8×25	2		
62	P311001622110000		Bearing Seat Ringφ72×2	1		
63	P311001622130000		Motor Ringφ58×2.4	1		
64	P311001622120000		Sensor Ringφ28×2	1		
65	P311001622040000		Locked Nut	1		
66	P311001622100000		Power Steering Comp	1		
67	P115000622180000		Sensor Cover, Power Steering	1		

ALL RIGHTS RESERVED
NORDIK MOTOR CANADA

AIR FILTER

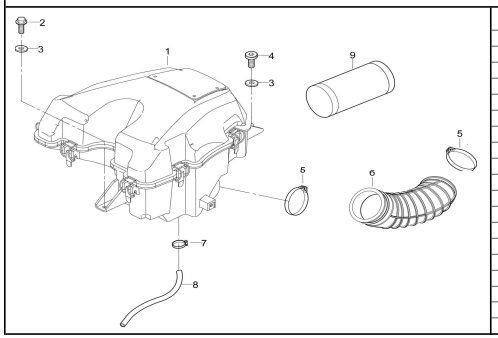

NO.	PART NO. (NEW)	PART N0. (OLD)	DESCRIPTION	Q'TY	PRICE	NOTE
1	P118000172000000	17100-118-0000	Secondary Air Filter Assy	1		
2	BGB16674-M6×30	B05-M6×30-57	Hexagon Flange BoltM6×30	1		
3	BGB97.1-6	B28-6-B1	Plain washer 6	3		
4	PJ00000902250000	90161-118-0008	Socket Hexagon Flat Head Bolt M6×12	2		
5	PJ00000907300900	90751-116-0005	Locking Hoop J	2		
6	P118000172080000	17106-118-0000	Adapter Sleeve Lsecondary exit pipe	1		
7	PJ00000907100700	90752-115-0004	Elastic Hoop H	2		
8	P1180001880l0000	16514-118-0025	EGR Tube I	1		
9	P1180001722A0000	17104-118-0000	Secondary Air Filter Element	1		

ALL RIGHTS RESERVED
NORDIK MOTOR CANADA

MUFFLER

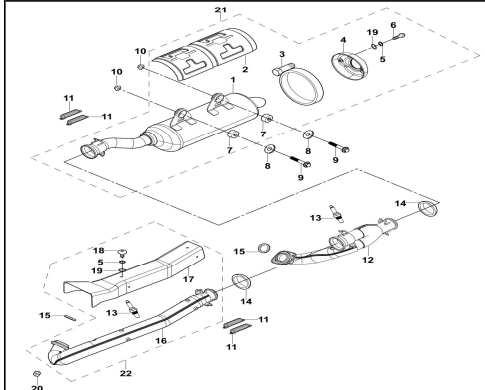

NO.	PART NO. (NEW)	PART N0. (OLD)	DESCRIPTION	Q'TY	PRICE	NOTE
1	P1180001810A0000	1810A-118-0000	Muffler Tube	1		
2	P1180001800300000	17209-118-0000	Shield,Muffler Tube	1		
3	PJ0000090730150O	90751-118-0012	Screw Locking Hoop P	2		
4	P1180001800400000	18135-118-0000	Muffler Tail Decorative Cover	1		
5	BGB93-6-B	B01-6-B0	Spring Washer -6	8		
6	BGB70.1-M6×2-B	B15-M6×20-30	Socket Hexagon Head Screw M6×20	2		
7	P1150001800500O0	18161-115-0000	Suspension Bushing	2		
8	P1070001800600O0	18008-107-0000	Muffler Gasket	2		
9	BGB16674-M8×40	B05-M8×40-57	Hexagon Flange Bolt M8×40	2		
10	BGB6187-M8	B09-M8-27	Hexagon Flange Locked Nut M8	2		
11	P1150001800200O0	95081-116-0008	Tension Spring A	8		
12	P1180001821A0000	18210-118-0000	welding assembly Ⅰ,exhaust pipe	1		
13	P1160039160O600O	39160-116-0000	Oxygen Sensor	2		
14	PJ0000018050010O	18006-115-0000	sealing gasket,hemispherical φ42	2		
15	PJ0000018020050O	18001-116-0000	Exhaust Pipe Gasket ⌀36.5×⌀46×6	2		
16	P1180001825A0000	18230-118-0000	Exhaust Pipe Shield II	1		
17	P1180001820100O0	17204-118-0000	Exhaust Pipe Shield Ⅰ	1		
18	BGB818-M6×12-B	90542-110-0009	Cross Large Plate Head Screw M6×12	6		
19	BGB97.1-6-B	B28-6-B1	Flat washer 6	8		
20	BGB6177.1-M8	B22-M8-27	Hexagon Flange Nut M8	4		
21	P1180001810000O0		Muffler Assy	1		
22	P1180001825000O0		Exaust Pipe Ⅱ	1		

ALL RIGHTS RESERVED
NORDIK MOTOR CANADA

FRONT SUSPENSION

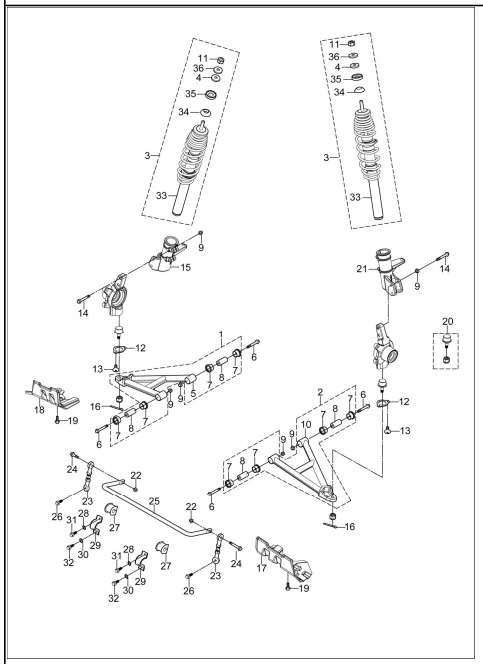

NO.	PART NO. (NEW)	PART N0. (OLD)	DESCRIPTION	Q'TY	PRICE	NOTE
1	P118000524500000		Front Right Lower Swing Arm Assy	1		
2	P118000523500000		Front Left Lower Swing Arm Assy	1		
3	P118000521000000	52100-118-0000	Front Shock Absorber P	2		
4	PJ00000931100600		Rubber Plain Washer φ19.5×4	2		
5	P1180005245A0000	5713A-118-0000	Front Right Lower Swing Arm	1		
6	BGB16674-M10×1.25×65	B06-M10×1.25×65-57	Hexagon Nut M10×1.25×65	4		
7	PJ00000925000200	54815-115-0000	Nylon Flanging Bush ø23×ø28	8		
8	PJ00000929007300	54840-107-0000	Bushingφ10.3×φ23×50	4		
9	BGB6187-M10×1.25	B10-M10×1.25-27	Hexagon Flange Locked Nut M10×1.25	8		
10	P1180005235A0000	5712A-118-0000	Front Left Lower Swing Arm	1		
11	BGB6187-M14×1.5	B10-M14×1.5-27	Hexagon Flange Locked Nut M14×1.5	2		
12	P1180005166600000	54675-118-0000	Hexagon Flange BoltM10×1.25×70	2		
13	BGB819.2-M6×12	B17-M6×12-W7	Cross Sunk Screw M6×12	4		
14	BGB16674-M10×1.25×70	B06-M10×1.25×70-57	Hexagon Flange Bolt M10×1.25×70	4		
15	P1180005173300000	52251-118-0000	Front shock-absorbing seat(R)	1		
16	BGB91-2×30	B12-2×30-W7	Cotter Pin 2×30	2		
17	P1180008250800000	82105-118-0000	Front Swing Arm Shield (L)	1		
18	P1180008250900000	82106-118-0000	Front Swing Arm Shield (R)	1		
19	BGB16674-M6×16	B05-M6×16-57	Hexagon Flange Bolt M6×16	2		
20	PJ00000525OA0400	62410-103-0000	Universal Joint E	2		
21	P1180005173200000	52151-118-0000	Front shock-absorbing seat(L)	1		
22	BGB6187-M8	B09-M8-27	Hexagon Flange Locked Nut M8	2		
23	P1180005275000000	57520-118-0000	Tie Rod Assy, Ani-roll Bar	2		
24	BGB16674-M8×30	B05-M8×30-57	Hexagon Flange BoltM8×30	2		
25	P1180005274A0000	5751A-118-0000	Anti-roll Bar, Front Suspension	1		
26	BGB16674-M8×25	B05-M8×25-57	Hexagon Flange Bolt M8×25	2		
27	PJ00000931400000	94144-112-0001	damping cover,balancing lever	2		
28	BGB93-6	B01-6-B7	Spring Washer 6	2		
29	P1150005159000000		Press Block, Rear Anti-Roll Bar	2		
30	BGB93-6	B01-6-B7	Spring Washer 6	2		
31	BGB16674-M8×25	B05-M8×25-57	Hexagon Flange Bolt M8×25	2		
32	BGB16674-M8×25	B05-M8×25-57	Hexagon Flange Bolt M8×25	2		
33	PJ00000521002100	52100-118-0000	Front Shock Absorber	2		
34	P1180008223200000		Lower seat,Shock Absorber	2		
35	P1180008223100000		Upper cover,Shock Absorber	2		
36	PJ00000906051200		Plain Washer φ14×φ38×2.5	2		

REAR SUSPENSION

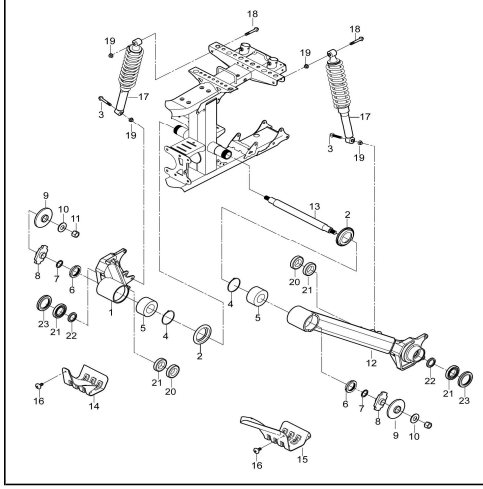

NO.	PART NO. (NEW)	PART N0. (OLD)	DESCRIPTION	Q'TY	PRICE	NOTE
1	P1180005545A0000	5724A-118-0000	Rear Right Lower Swing Arm	1		
2	P1180008281600000	82227-118-0000	Dust Cover,Rear Swing Arm I	2		
3	BGB16674-M10×1.25×55	B06-M10×1.25×55-57	Hexagon Flange Bolt M10×1.25×55	2		
4	BGB893.2-d0~85	B33-85-BB	Elasticity Block Ring d0~22	1		
5	P1180005510500000	91105-118-0001	Bearing ,Rear Swing Arm	1		
6	P1180005574800000	B36-M45×1.5-BA	Round nut	1		
7	BGB894-d0~45	B20-42-BB	Elasticity Block Ring d0~45	1		
8	P1180005574700000	57563-118-0000	Plate,Rear balancing lever	2		
9	P1180008281700000	82228-118-0000	Rear Swing Arm Dust Cover II	2		
10	PJ00000906050900	90691-118-0016	Flat Washer 20	2		
11	BGB6187-M18×1.5	B10-M18×1.5-27	Hexagon Flange Self-Lock Nuts M18×1.5	2		
12	P1180005535A0000	5725A-118-0000	Rear Left Lower Swing Arm	1		
13	P1180005574100000	57564-118-0000	Rear balancing lever	1		
14	P1180008251100000	82204-118-0000	Rear Protection Plate, Suspension (R)	1		
15	P1180008251000000	82203-118-0000	Rear Swing Arm Shield (L)	1		
16	PJ00000905200000	90542-102-0003	Cross Flat Head Screws M6×16	4		
17	PJ00000551002100	55100-118-0000	Rear Shock Absorber P	2		
18	BGB16674-M10×1.25×60	B06-M10×1.25×60-57	Hexagon Flange Bolt M10×1.25×60	2		
19	BGB6187-M10×1.25	B10-M10×1.25-27	Hexagon Flange Locked Nut M10×1.25	4		
20	P1150009112000000	52256-115-0000	Inner Oil Sealφ38×φ62×8, Rear Knuckle Bearing	2		
21	BGB276-6206RS	62258-115-0000	Deep Groove Ball Bearing 6206Rs	4		
22	P1150005570400000	62259-115-0000	Inside Spacer Bush,Rear Knuckle Bearing	2		
23	P1150009112100000	62257-115-0000	Outer Oil Sealφ42×φ62×7, Rear Knuckle Bearing	2		

ALL RIGHTS RESERVED
NORDIK MOTOR CANADA

FRONT TRANSMISSION

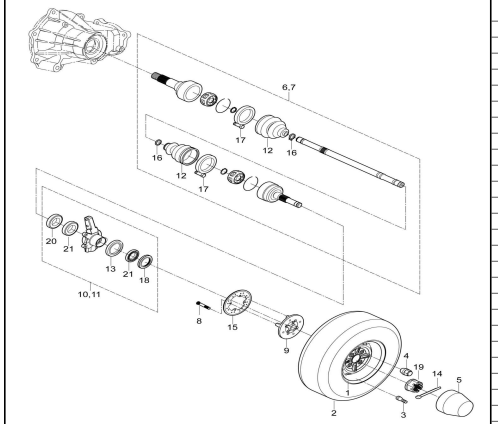

NO.	PART NO. (NEW)	PART N0. (OLD)	DESCRIPTION	Q'TY	PRICE	NOTE
1	PJ000004112215O0	41120-118-1K00	Front Rim(F103,Steel,Black)	2		
2	PJ000004112112O0	41170-115-0200	Front Tyre	2		
3	P1150004113A0000	41275-115-0000	Valve Core	2		
4	PJ000009034500O0	90431-102-0000	Nut M10×1.25	8		
5	PJ000004100404O0	83115-118-0000	Wheel Cap E	2		
6	PJ000002610011O0	47210-118-0000	Front Left C.V Axle M	1		
7	PJ000002620009O0	47230-118-0000	Front Right C.V Axle K	1		
8	PJ000009022000O0	90101-115-0000	Inner Hexagon Cone Step Bolt With Pan M8x20	8		
9	P1180004611000O0	62310-117-0000	Mounting Bracket For Front Hub	2		
10	P1180005271000O0	62210-118-0000	Front Left Knuckle Assy.	1		
11	P1180005272000O0	62230-118-0000	Front Right Knuckle Assy.	1		
12	PJ000002600205O0	47212-107-0000	Rubber Dust-Cover F	4		
13	P1150005211200O0	62215-115-0000	Inside Spacer Bush,Front Knuckle Bearing	2		
14	BGB91-3.2×50	47204-112-0000	Cotter Pin 3.2×50	2		
15	P1170004445300O0	41105-119-0000	Front Brake Plate	2		
16	PJ000002650003O0	47202-107-0000	Rubber Dust-Cover Hoop D	4		
17	PJ000002650002O0	47201-107-0000	Rubber Dust-Cover Hoop C	4		
18	P1150009311900O0	62257-115-0000	Outer Oil Seal, Front Knuckle Φ38×Φ55×7	2		
19	BGB9459-M24×1.5-C	47203-115-0000	Hexagon Thin Slotted Nut M24×1.5	2		
20	P1150009111800O0	62256-115-0000	Inner Oil Seal, Front Knuckle Φ38×Φ55×8	2		
21	BGB276-1194-6006	91102-103-0004	Deep Groove Ball Bearing 6006	4		

ALL RIGHTS RESERVED
NORDIK MOTOR CANADA

FRONT CASE PART

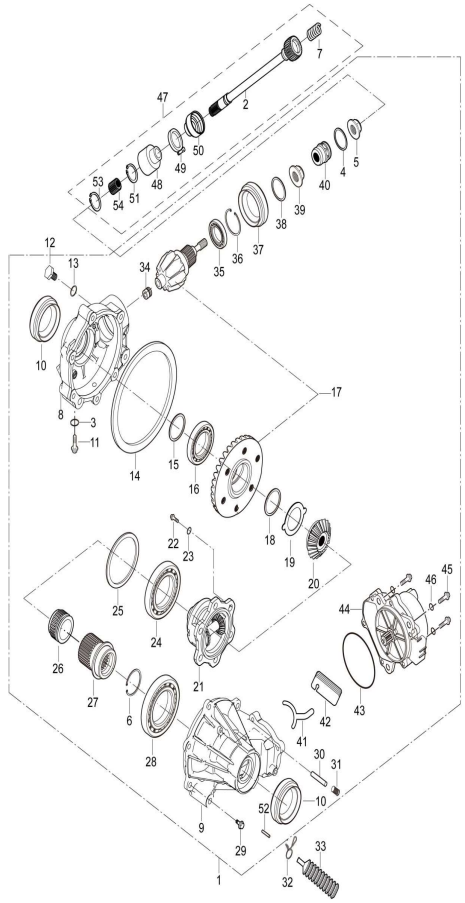

NO.	PART NO. (NEW)	PART N0. (OLD)	DESCRIPTION	Q'TY	PRICE	NOTE
1	P118000271000000	47100-118-0000	Front Differential Assy	1		
2	PJ00000252000400	26310-118-0000	Front Axle Differential Case Ⅰ	1		
3	P115000272630000	46136-115-0000	Oil Drain Plug O-Ring Φ1.5×Φ9	1		
4	P107000271390000	47104-115-0000	O-Ringφ14×φ6.8, Driving Tooth	1		
5	BGB6187-M14×1.5	B10-M14×1.5-27	Hexagon Flange Locked Nut M14×1.5	1		
6	BGB893.1-d0~62	PB33-62-BB	Circlip D0~62	1		
7	PJ00000251030300	26313-118-0000	Drive Shaft Sping D	1		
8	P107000271040000	47101-115-0000	Front Axle Gear Box	1		
9	P107000271030000	47102-118-0000	Front Axle Gear Box Cover	1		
10	P115000911220000	47106-115-0000	Front Diff. Output Shaft Oil Sealφ24×Φ38×8	2		
11	BGB16674-M10×1.25×16	B06-M10×1.25×16-57	Hexagon Flange Bolt M10×1.25×16	1		
12	P115000271520000	47193-115-0000	Bolt M14×1.5×10	1		
13	BGB6659-φ12.5×φ1.5	47121-115-0000	Rubber O-Ring Φ12.5×Φ1.5	1		
14	BGB3452.1-Φ140×Φ2.65	47116-115-0000	O-Ring Φ140×Φ2.65	1		
15	PJ00000273000000	47107-115-0000	Adjustment Gasket Ⅰ φ50×Φ61.5	1		
16	BGB276-6007	47117-115-0000	Deep Groove Ball Bearing φ35×φ62×14	1		
17	P118000271510000	47103-116-0000	Drive&Driven Gears Assy, Front Axle	1		
18	PJ00000273000600	47198-115-0000	Adjustment Gasket Φ40×Φ57×0.1	1		
19	P115000271080000		Anti-Rotation Gasket	1		
20	P107000271110000		Bevel Gear，Front Axle	1		
21	P107000271120000		Transfer Gear	1		
22	BGB5783-M10×1.25×16		Bolt M10×1.25×16	6		
23	BGB97.1-10	B04-10-B7	Plain washer 10	6		
24	BGB276-61912	47118-115-0000	Deep Groove Ball Bearing 61912	1		
25	PJ00000273000300	47197-115-0000	Adjustment Gasket Φ71×Φ83×0.1	1		
26	P107000271140000	47174-107-0000	Sliding Sleeve	1		
27	P115000271150000	47113-115-0000	Divide Device Connection	1		
28	BGB276-16007	47119-115-0000	Deep Groove Ball Bearing 16007	1		
29	BGB16674-M8×25	B05-M8×25-57	Hexagon Flange Bolt M8×25	6		
30	P115000271160000	47111-115-0000	Cylindrical Pin Φ5×75	1		
31	P107000271170000	PB15-M8×10-37	Inner Hexagon Screw With Flat Head M8×10	1		
32	PJ00000907100200	90752-115-0001	Elastic Hoop C	1		
33	P118000271180000	47191-116-0000	Air Tap	1		
34	P115000929010000	47120-115-0000	Needle Bearing Φ15×Φ21×12	1		
35	BGB276-6007	47117-115-0000	Deep Groove Ball Bearing φ35×φ62×14	1		
36	BGB893.1-d0~62	PB33-62-BB	Circlip D0~62	1		
37	P115000911150000	47105-115-0000	Oil Seal Φ48×Φ65×9, Driving Tooth	1		
38	P115000271390000	47104-115-0000	O-Ring Φ14×Φ7 , Driving Tooth	1		
39	BGB6187-M14×1.25	B10-M14×1.5-27	Hexagon Flange Locked Nut M14×1.25	1		
40	P107000271310000	47173-107-0000	Drive Gear Connecting Seat	1		
41	P115000271190000	47122-115-0000	Fork	1		
42	P115000271200000	47114-115-0000	Spline	1		
43	P115000271410000	47115-115-0000	O-Ring Φ81×Φ2	1		
44	P115000271210000	47130-115-0000	Transfer Case Assembly	1		
45	BGB70.1-M8×20	B15-M8×20-37	Hexagon Socket Cap Screw M8×20	3		
46	BGB97.1-8	B04-8-B7	Plain washer 8	3		
47	P118000252100000	26310-118-0000	Front Drive Shaft Assy, Front Diff.	1		
48	PJ00000251021000	26337-118-0000	Rear Dustproof Rubber Sleeve L	1		
49	PJ00000251050000	26314-107-0000	Hoop A	1		
50	PJ00000251020900		Dustproof Sleeve K	1		
51	BGB894.1-d0~19	26315-115-0000	Circlip φ19	1		
52	P107000271220000		Air Tap,Front Axle	1		
53	BGB894.1-d0~22		Circlip φ22	1		
54	PJ00000251010000	26316-116-0000	Bush A, Front Transmission Shaft	1		

ALL RIGHTS RESERVED
NORDIK MOTOR CANADA

REAR TRANSMISSION

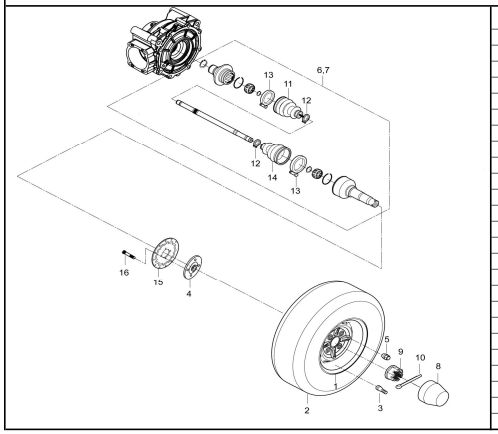

NO.	PART NO. (NEW)	PART N0. (OLD)	DESCRIPTION	Q'TY	PRICE	NOTE
1	PJ00000411621500	41250-118-1K00	Rear Rim(F103,Steel,Black)	2		
2	PJ00000411611200	41270-116-0000	Rear Tyre	2		
3	P11500004113A0000	41275-115-0000	Valve Core	2		
4	P1100004621000000	46106-118-0000	Mounting Bracket ,Rear Hub	2		
5	PJ00000903450000	90431-102-0000	Nut M10×1.25	8		
6	PJ00000263001000	47250-118-0000	Rear right axle L	1		
7	PJ00000264001100	47270-118-0000	Rear let axle M	1		
8	PJ00000410040500	83101-107-0000	Wheel Cap F	2		
9	BGB9459-M24×1.5	47203-115-0000	Hexagon Thin Slotted Nut M24×1.5	2		
10	BGB91-3×40	B12-3.5×50-W7	Cotter Pin 3x40	2		
11	PJ00000260020700	47251-115-0000	Inner Rubber Dust-Proof Boot H	2		
12	PJ00000265001300	47202-107-0000	Clamp C	4		
13	PJ00000265001200	47201-107-0000	Clamp E	4		
14	PJ00000260020600	47212-107-0000	Outer Rubeer Dust-Proof Boot G	2		
15	P1180004445600000		Rear Brake pad	1		
16	PJ00000902200000	90101-115-0000	Inner Hexagon Cone Step Bolt With Pan M8x20	8		

ALL RIGHTS RESERVED
NORDIK MOTOR CANADA

REAR BRIDGE TRANSMISSION BOX

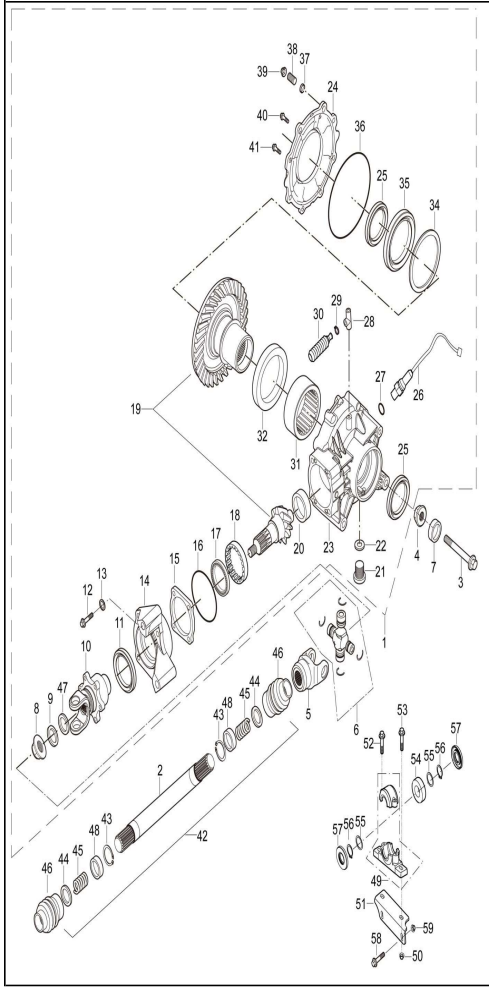

NO.	PART NO. (NEW)	PART N0. (OLD)	DESCRIPTION	Q'TY	PRICE	NOTE
1	P118000272000000	46100-118-0000	Rear Reducer Assy	1		
2	PJ00000252000300	26332-118-0000	Rear Transmission Shaft D	1		
3	BGB16674-M10×1.25×135	B06-M10×1.25×135-57	Hexagon Flange Bolt M10×1.25×135	2		
4	BGB6187-M10×1.25	B10-M10×1.25-27	Hexagon Flange Locked Nut M10×1.25	2		
5	PJ00000254000500	26412-118-0000	Connection Fork	2		
6	PJ00000255000200	26420-118-0000	Universal Joint Assy	1		
7	PJ00000929004100	90693-118-0038	Cylindrical Bush φ10.5×φ24×11.5	2		
8	BGB6187-M12×1.25	B10-M12×1.25-27	Hexagon Flange Locked Nut M12×1.25	1		
9	P115000272140000	46110-115-0000	Washer,Drive Gears	1		
10	PJ00000254000600	46106-118-0000	Connection Fork	1		
11	P115000911160000	46107-115-0000	Oil Seal Φ61×Φ35×9, Input Shaft	1		
12	BGB16674-M8×35	B05-M8×35-57	Hexagon Flange Bolt M8×35	4		
13	BGB97.1-8	B04-8-B7	Plain washer 8	4		
14	P115000272160000	46111-115-0000	Mount Bracket,Parking Brake	1		
15	PJ00000273001300	46112-115-0000	Adjustment Gasket Φ78×Φ93×0.1	1		
16	P115000272410000	46109-115-0000	O-Ring Φ3.1×Φ63.8	1		
17	BGB276-6305	46108-115-0000	Bearinge25×Φ62×17	1		
18	P115000272180000	46118-115-0000	Sleeve	1		
19	P118000272310000	46104-118-0000	Drive&Driven Gears Assy, Rear Axle	1		
20	P115000929020000	46102-115-0000	Needlebearing Φ22×Φ30×13	1		
21	BGB16674-M14×1.5×10		Hexagon Flange Bolt M10×1.25×16	1		
22	P115000272640000	47121-115-0000	Oil Drain Plug O-Ring Φ1.5×Φ13	1		
23	P107000272020000	46116-118-0000	Rear Axle Gear Box	1		
24	P107000272010000	46101-118-0000	Rear Axle Gear Box Cover	1		
25	P118000911400000	46120-118-0000	O-Ringe65×Φ90×9	2		
26	P107000363000000	36300-107-0000	Speed Sensor	1		
27	BGB3452.1-φ19×φ1.8	46175-107-0000	Rubber O-Ring Φ19×Φ1.8	1		
28	P115000272230000	46115-115-0000	Air Tap,Rear Axle	1		
29	PJ00000907100200	90752-115-0001	Elastic Hoop C	1		
30	P116000270180000		Air Tap	1		
31	P107000929030000	46103-115-0000	Needlebearing Φ55×Φ67×20	1		
32	PJ00000273001200	46113-115-0000	Adjustment Gasket Φ55.2×Φ66.8×1.7	1		
33						
34	PJ00000273000900	46123-115-0000	Adjustment Gasket Φ86×Φ100×0.1	1		
35	BGB276-16017	46121-115-0000	Deep Groove Ball Bearing 16017	1		
36	P115000272550000	46122-115-0000	O-Ring Φ3.1×Φ150, Rear Differential Case Cover	1		
37	P115000272270000	46168-115-0100	Copper Gasket Φ8.2X1	1		
38	P107000272280000	46169-115-0000	Inner Hexagon Half-Round Screw M8×45	1		
39	BGB6187-M8	B09-M8-27	Hexagon Flange Locked Nut M8	1		
40	BGB16674-M8×25	B05-M8×25-57	Hexagon Flange Bolt M8×25	6		
41	BGB16674-M10×1.25×25	B06-M10×1.25×25-57	Hexagon Flange Bolt M10×1.25×25	2		
42	P118000253100000	26330-118-0000	Rear Drive Shaft Assy,Rear Axle	1		
43	BGB894.1-d0=25	B20-25-BB	Circlip Φ25	2		
44	PJ00000251040100	26316-115-0000	Washer Φ31.5×Φ25×1,Drive Shaft	2		
45	PJ00000251030100	26313-116-0000	Pressure Spring, Drive Shaft	2		
46	PJ00000251020200	26314-116-0000	Rubbercover，Drive Shaft	2		
47	PJ00000272150000		Rear Driving Gear，O-Type Ring	1		
48	PJ00000251010000	26316-116-0000	Bushing, Drive Shaft	2		
49	P311001251100000		Bearing Seat,Front Transmission Shaft	1		
50	BGB6187-M8	B09-M8-27	Hexagon Flange Locked Nut M8	2		
51	P118000610060000	51392-118-0000	Bearing Pressure Plate	1		
52	BGB16674-M8x25	B05-M8×25-57	Hexagon Flange Bolt M8×25	2		
53	BGB16674-M6x30	B05-M6×30-57	Hexagon Flange BoltM6×30	2		
54	BGB276-6205-2RS		Ball Bearing 6205-2Rs	1		
55	PJ00000251040100	26316-115-0000	Washer Φ31.5×Φ25×1,Drive Shaft	2		
56	BGB849.1-d0=25	B20-25-BB	Circlip Φ25	2		
57	P501010911390000		Oil Seal φ25×φ42×7	2		
58	BGB16674-M10×1.25×20	B06-M10×1.25×20-57	Hexagon Flange Bolt M10×1.25×20	2		
59	BGB6187-M10×1.25	B10-M10×1.25-27	Hexagon Flange Locked Nut M10×1.25	2		

ALL RIGHTS RESERVED
NORDIK MOTOR CANADA

REAR BRAKE DISC

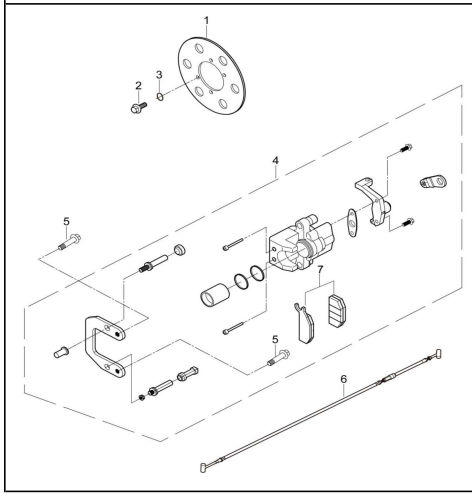

NO.	PART NO. (NEW)	PART N0. (OLD)	DESCRIPTION	Q'TY	PRICE	NOTE
1	P118000444570000	41201-118-0000	Parking Brake Plate	1		
2	PJ0000902250200	90111-115-0000	Socket Hexagon Screw M6×28	6		
3	BGB/93-8	B01-8-B7	Spring Washer 8	6		
4	P115000443100000	45800-115-0000	Parking Brake Assy	1		
5	BGB16674-M10×1.25×55	B06-M10×1.25×55-57	Hexagon Flange Bolt M10×1.25×55	2		
6	PJ000004323A1400	43210-118-0000	Parking Cable P	1		
7	P115000443110000		Packing Brake Pad	1		

ALL RIGHTS RESERVED
NORDIK MOTOR CANADA

CLUTCH COOLING PIPE

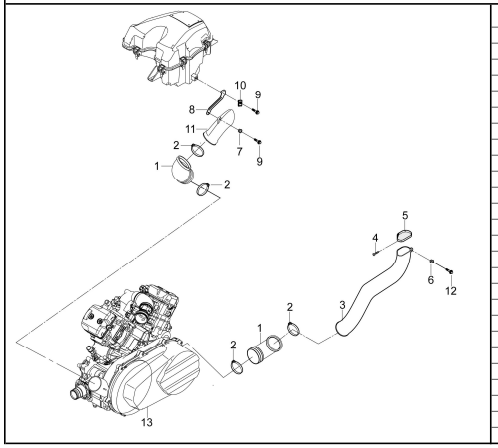

NO.	PART NO. (NEW)	PART N0. (OLD)	DESCRIPTION	Q'TY	PRICE	NOTE
1	P107000172210000	17163-107-0000	Inlet Pipe Connector I,Clutch	2		
2	PJ00000907301100	90751-103-0003	Locking Hoop L	4		
3	P118000172190000	17162-118-0000	Inlet Pipe I, Clutch	1		
4	BGB845-ST4.8x13	90541-115-0003	Cross Small Plate Head Tapping Screw ST4.8×13	2		
5	P118000171610000	17161-118-0100	Inlet Pipe Cover, Clutch	1		
6	BGB6187-M6	B09-M6-27	Hexagon Flange Locked Nut M6	1		
7	P118000172160000	17164-118-0000	Outlet Pipe , Clutch	1		
8	P118000515380000	54678-118-0000	Outlet Pipe Mounting Board,Clutch	1		
9	BGB16674-M6×16	B05-M6×16-57	Hexagon Flange Bolt M6×16	2		
10	PJ00000903500300	90441-102-0001	Nut Holder M6×2	1		
11	P118000172160000	17164-118-0000	Outlet Pipe , Clutch	1		
12	BGB16674-M6×16	B05-M6×16-57	Hexagon Flange Bolt M6×16	1		
13	E010000100000100		Engine	1		

ALL RIGHTS RESERVED
NORDIK MOTOR CANADA

GEAR SHIFT MECHANISM COMP.

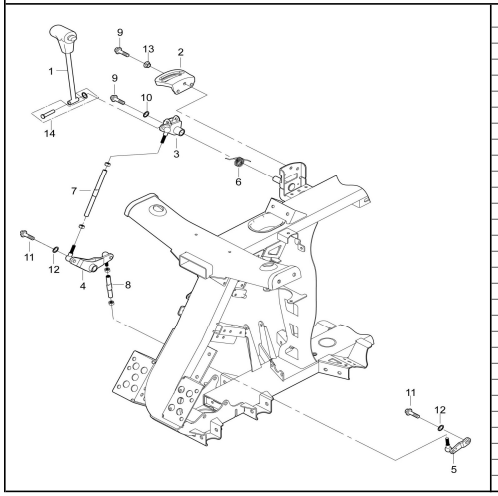

NO.	PART NO. (NEW)	PART N0. (OLD)	DESCRIPTION	Q'TY	PRICE	NOTE
1	P118000234100000	2351B-118-0000	Gear Shifter Assembly	1		
2	P118000824110000	82531-118-0000	Gear Shift Spacer Board	1		
3	P1180002345A0000	23580-118-0000	Gear Shift Steering Arm Welding Assembly I	1		
4	P1180002346A0000	23550-118-0000	Gear Shift Steering Arm Welding Assembly II	1		
5	P1180002332A0000	24110-118-0000	Gearshift Arm	1		
6	PJ00000963000600	95082-118-0009	Sping G	1		
7	P1180002342A0000	23561-118-0000	Gear Lever	1		
8	P1180002343A0000	23562-118-0000	Gear Lever rod II	1		
9	BGB16674-M8×16	B05-M8×16-57	Hexagon Flange Bolt M8×16	5		
10	BGB97.1-8	90691-102-0001	Plain washer 8	2		
11	BGB16674-M6×16	B05-M6×16-57	Hexagon Flange Bolt M6×16	1		
12	BGB96.1-6	B03-6-B7	Plain washer 6	1		
13	BGB6187-M8	B09-M8-27	Hexagon Flange Locked Nut M8	3		
14	P118000234750000	23523-118-0000		1		
15						

ALL RIGHTS RESERVED
NORDIK MOTOR CANADA

TAIL LIGHT

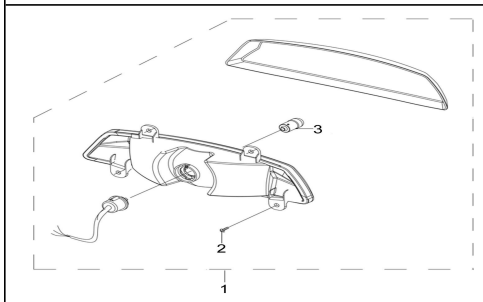

NO.	PART NO. (NEW)	PART N0. (OLD)	DESCRIPTION	Q'TY	PRICE	NOTE
1	P11800035300000	35250-118-0000	Rear Position Light Assy	1		
2	BGB845-ST4.8×13	B18-ST4.8×13C-W7	Cross Small Plate Head Screw ST4.8×13	4		
3	PJ0000038441000	35375-115-0000	Bulb, 12V R10W	1		

ALL RIGHTS RESERVED
NORDIK MOTOR CANADA

FUEL TANK

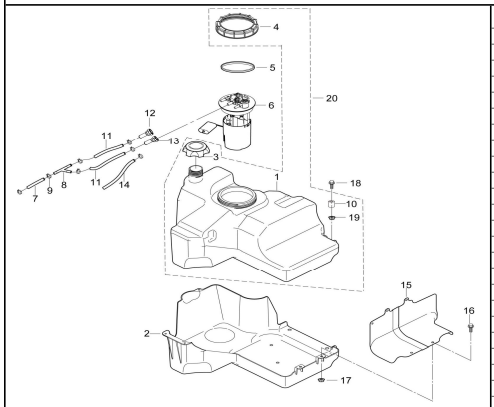

NO.	PART NO. (NEW)	PART N0. (OLD)	DESCRIPTION	Q'TY	PRICE	NOTE
1	P118000811100000	81140-118-0100	Fuel Tank	1		
2	P118000811510000	82703-118-0000	Fuel Tank Bottom Plate	1		
3	P311001811400000	81132-119-0000	Fuel Tank Cover	1		
4	P116000811530000	39505-115-0000	Oil Pump Cover	1		
5	PJ0000933800100	94021-116-0000	Seal Gasket B For Fuel Pump	1		
6	P118000395000000	39500-118-0000	Fuel Pump Assy	1		
7	P116000165110000	16511-110-0001	High Pressure Fuel Pipe Ⅰ	1		
8	P116000165230000	15305-010-0000	Triplet Joint Fuel Pipe	1		
9	PJ0000907200000	90401-010-0000	Clamp A	9		
10	PJ0000929001200	90693-118-0036	Cylindrical Bush φ8.5×φ12×8	3		
11	P118000165120000	16511-116-0004	High Pressure Fuel Pipe Ⅱ φ8×φ14×885	2		
12	P116000165220000	39581-116-0000	Fuel Inlet Plug	1		
13	P116000165210000	39582-116-0000	Fuel outlet Plug	1		
14	P118000165130000	16513-112-0009	High Pressure Fuel Pipe Ⅲ	1		
15	P118000182020000	17206-118-0000	Exhaust Pipe Shield Ⅱ	1		
16	BGB16674-M6×16	B05-M6×16-57	Hexagon Flange Bolt M6×16	4		
17	BGB6187-M6	B09-M6-27	Hexagon Flange Locked Nut M6	2		
18	BGB16674-M8×25	B05-M8×25-57	Hexagon Flange Bolt M8×25	3		
19	BGB6187-M8	B09-M8-27	Hexagon Flange Locked Nut M8	3		
20	P118000811000000		Fuel Tank Assy(EPA)	1		

ALL RIGHTS RESERVED
NORDIK MOTOR CANADA

LEFT/RIGHT FOOTREST

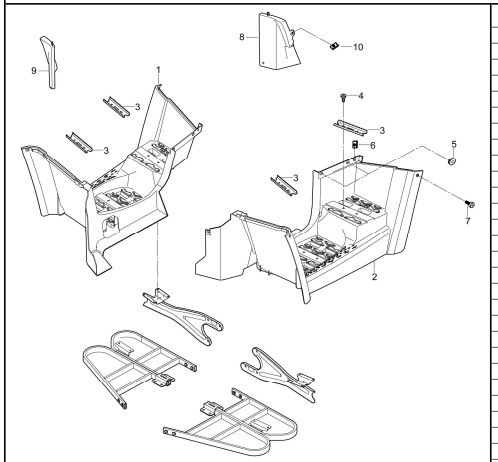

NO.	PART NO. (NEW)	PART N0. (OLD)	DESCRIPTION	Q'TY	PRICE	NOTE
1	P118000824040000	82801-118-0000	Right Footrest board	1		
2	P118000824020000	82801-118-0000	Left Footrest board	1		
3	P118000515270000	54216-118-0000	Anti-Skidding Block,Footrest	4		
4	PJ00000902250100	90161-101-0013	Socket Hexagon Screw M6×16	12		
5	PJ00000931350000	94022-118-0002	shock pad，Adjustable card slot φ8×12	4		
6	PJ00000903500300	90441-102-0001	Nut Holder M6×2	4		
7	PJ00000902250000	90161-118-0008	Socket Hexagon Flat Head Bolt M6×12	4		
8	P118000825020000	83305-118-0000	Front Right Mud-Guard Board	1		
9	P118000825010000	83306-118-0000	Side protective panel(L) 1	1		
10	PJ00000903500300	90441-102-0001	Nut Holder M6×2	2		

ALL RIGHTS RESERVED
NORDIK MOTOR CANADA

METER

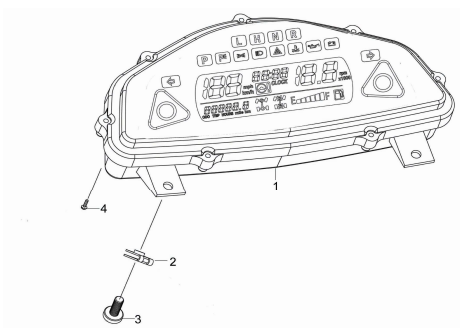

NO.	PART NO. (NEW)	PART N0. (OLD)	DESCRIPTION	Q'TY	PRICE	NOTE
1	P1180003610000000	36100-118-0000	Meter Assy	1		
2	PJ0000090350030 0	90441-102-0001	Nut Holder M6×2	2		
3	PJ0000090225000 0	90161-118-0008	Socket Hexagon Flat Head Bolt M6×12	2		
4	BGB845-ST4.8×13	B18-ST4.8×13C-W7	Cross recessed pan head tapping screw St4.8×13	2		

ALL RIGHTS RESERVED
NORDIK MOTOR CANADA

SEAT

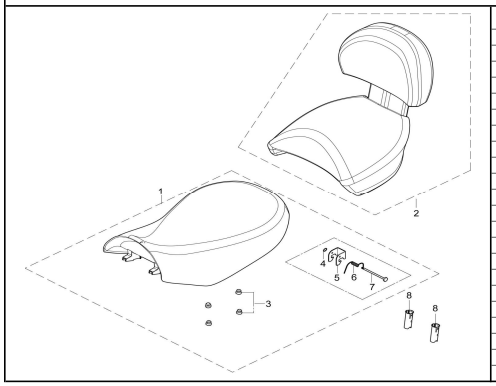

NO.	PART NO. (NEW)	PART N0. (OLD)	DESCRIPTION	Q'TY	PRICE	NOTE
1	P118000711100000	71210-118-0000	Seat Cushion Comp. I	1		
2	P118000712100000	71230-118-0000	Backrest	1		
3	PJ0000093115040O	71213-118-0000	Round shocking Gasket φ10×14	4		
4	BGB6184-M6-BA		Metal Locked Nut M6	1		
5	P118000711130000	71221-118-0000	front seat hook	1		
6	PJ00000963001300		Spring, seat lock	1		
7	BGB5783-M6×120-BA		Socket Hexagon ScrewM6×120	1		
8	P118000715800000	71437-118-0000	Backrest Sleeve	2		

ALL RIGHTS RESERVED
NORDIK MOTOR CANADA

FUEL TANK COVER

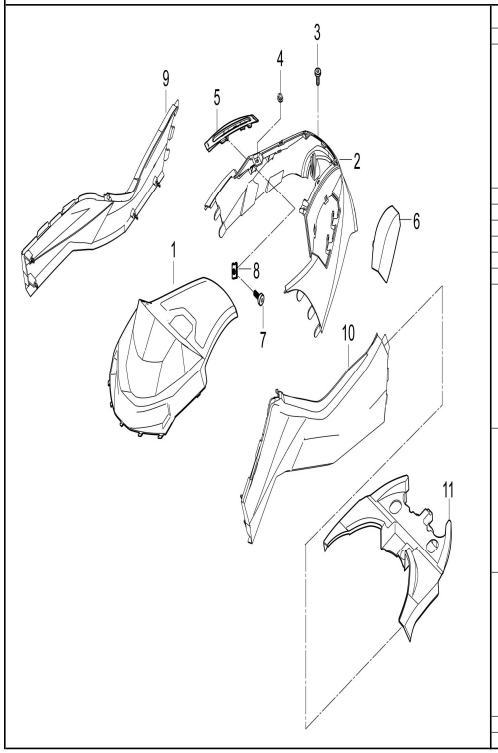

NO.	PART NO. (NEW)	PART N0. (OLD)	DESCRIPTION	Q'TY	PRICE	NOTE
1	P118000823010000	82601-118-0000	Dash Board	1		
2	P1180008231000033	82631-118-0001	Meter connecting plate	1		
	P1180008231000070	82631-118-0002	Connecting Plate,Dash Board(Blue)	1		
	P1180008231000012	82631-118-0003	Connecting Plate,Dash Board(White)	1		
	P1180008231000022	82631-118-0004	Connecting Plate,Dash Board(Black)	1		
	P1180008231000062	82631-118-0007	Connecting Plate,Dash Board(Dark Green)	1		
	P1180008231000040	82631-118-00011	Connecting Plate,Dash Board(Orange)	1		
	P1180008231000031		Connecting Plate,Dash Board(Dark)	1		
	P1180008231000092	82631-118-00008	Connecting Plate,Dash Board(Green Camouflage)	1		
	P1180008231000093	82631-118-000010	Connecting Plate,Dash Board(Vista Camouflage)	1		
3	BGB16674-M6×16	B05-M6×16-57	Hexagon Flange Bolt M6×16	2		
4	PJ0000931250200	94141-107-0006	Rubber Washere9×2.5	4		
5	P118000823140000	82533-118-0000	Meter shield, trim strip II	1		
6	P118000823130000	82532-118-0000	Meter shield, trim strip I	1		
7	PJ0000902250000	90161-118-0008	Socket Hexagon Flat Head Bolt M6×12	4		
8	PJ0000903500300	90441-102-0001	Nut Holder M6×2	4		
9	P1180008240900033	82321-118-0001	Fuel Tank Right Cover（Red）	1		
	P1180008240900070	82321-118-0002	Fuel Tank Right Cover（Blue）	1		
	P1180008240900012	82321-118-0003	Fuel Tank Right Cover(White)	1		
	P1180008240900022	82321-118-0004	Fuel Tank Right Cover(Black)	1		
	P1180008240900062	82321-118-0007	Fuel Tank Right Cover(Dark Green)	1		
	P1180008240900040	82321-118-00011	Right Panel,Fuel Tank(Orange)	1		
	P1180008240900031		Right Panel,Fuel Tank(Red)	1		
	P1180008240900092	82321-118-00008	Fuel Tank Right Cover(Green Camouflage)	1		
	P1180008240900093	82321-118-00010	Fuel Tank Right Cover(Vista Camouflage)	1		
10	P1180008240800033	82311-118-0001	Fuel Tank Left Cover（Red ）	1		
	P1180008240800070	82311-118-0002	Fuel Tank Left Cover（Blue）	1		
	P1180008240800012	82311-118-0003	Fuel Tank Left Cover(White)	1		
	P1180008240800022	82311-118-0004	Fuel Tank Left Cover(Black)	1		
	P1180008240800062	82311-118-0007	Fuel Tank Left Cover(Dark Green)	1		
	P1180008240800040	82311-118-0011	Left Panel,Fuel Tank(Orange)	1		
	P1180008240800031		Left Panel,Fuel Tank(Red)	1		
	P1180008240800092	82311-118-0008	Fuel Tank Left Cover(Green Camouflage)	1		
	P1180008240800093	82311-118-0010	Fuel Tank Left Cover(Vista Camouflage)	1		
11	P1180008240500033	82347-118-0001	Protective Plate under Seat	1		
	P1180008240500070	82347-118-0002	Seat Lower Protective Plate I (Blue)	1		
	P1180008240500012	82347-118-0003	Seat Lower Protective Plate I (White)	1		
	P1180008240500022	82347-118-0004	Seat Lower Protective Plate I (Black)	1		
	P1180008240500062	82347-118-0007	Seat Lower Protective Plate I Dark Green)	1		
	P1180008240500040	82347-118-0011	Seat Lower Protective Plate I (Orange)	1		
	P1180008240500031		Seat Lower Protective Plate I (Red)	1		
	P1180008240500092	82347-118-0008	Seat Lower Protective Plate I (Green Camouflage)	1		
	P1180008240500093	82347-118-0010	Seat Lower Protective Plate I (Vista Camouflage)	1		

ALL RIGHTS RESERVED
NORDIK MOTOR CANADA

CARRIER

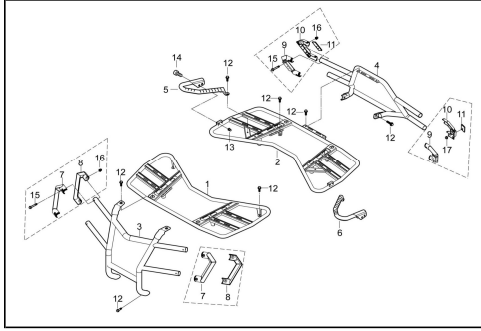

NO.	PART NO. (NEW)	PART N0. (OLD)	DESCRIPTION	Q'TY	PRICE	NOTE
1	P118000513500000	7213A-118-0000	Front Carrier	1		
2	P118000514500000	7214A-118-0000	Rear Carrier	1		
3	P118000513000000	7360A-118-0000	Front Bumper	1		
4	P118000514000000	7370A-118-0000	Rear Bumper Comb.	1		
5	P1180007222A0000	72202-118-0000	hand grab II	1		
6	P1180007221A0000	72201-118-0000	Passenger Handle Bar Assy	1		
7	P118000821020000	73732-118-0000	Diamond plate seat I	1		
8	P118000821030000	73731-118-0000	Diamond plate cover I	1		
9	P118000821040000	73734-118-0000	Diamond plate seat II	1		
10	P118000821050000	73733-118-0000	Diamond plate cover II	1		
11	P102000348000000	34820-102-0000	Rear reflector	2		
12	BGB16674-M8×16	B05-M8×16-57	Hexagon Flange Bolt M8×16	6		
13	BGB70.1-M8×35	B15-M8×35-37	Hexagon Bolt M8×35	4		
14	BGB923-M8×15	90442-110-0005	Cap Nut M8×15	4		
15	BGB16674-M6×45	B05-M6×45-57	Hexagon Flange Bolt M6x45	8		
16	BGB923-M6×12	90442-102-0001	Cap Nut M6x12	8		
17	BGB6177.1-M5	B22-M5-27	Hexagon Flange nut M5	2		

ALL RIGHTS RESERVED
NORDIK MOTOR CANADA

REAR BODY

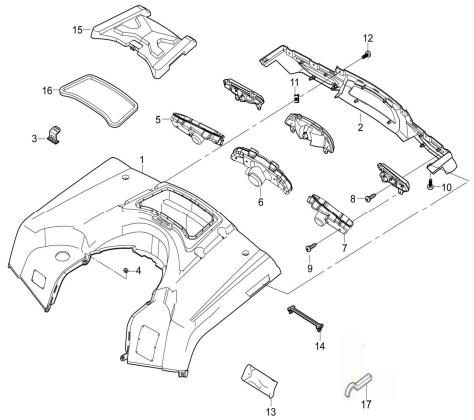

NO.	PART NO. (NEW)	PART N0. (OLD)	DESCRIPTION	Q'TY	PRICE	NOTE
1	P11800082802000033	83601-118-0001	Rear Body Cover（Red）	1		
	P11800082802000070	83601-118-0002	Rear Body Cover（Blue）	1		
	P11800082802000012	83601-118-0003	Rear Body Cover(White)	1		
	P11800082802000022	83601-118-0004	Rear Body Cover(Black)	1		
	P11800082802000062	83601-118-0007	Rear Body Cover(Dark Green)	1		
	P11800082802000040	83601-118-0011	Rear Panel：Orange	1		
	P11800082802000031		Rear Panel：Red	1		
	P11800082802000092	83601-118-0008	Rear Body Cover(Green Camouflage)	1		
	P11800082802000093	83601-118-0010	Rear Body Cover（Yellow Camo Vista Color）	1		
2	P11800082801000O	82541-118-0000	Rear Tail-lamp Cover	1		
3	PJ00000932350000	94056-118-0000	Sundry Box Drawstring	1		
4	PJ00000931350000	94022-118-0002	shock pad，Adjustable card slot φ8×12	2		
5	P11800082221000O	82562-118-0000	Tail light fitting board 1(R)	1		
6	P11800082814000O	82541-118-0000	Tail Light Cover	1		
7	P11800082220000O	82561-118-0000	Tail light fitting board 1(L)	1		
8	BGB845-ST3.9×13	B18-ST3.9×13C-W7	Cross Small Plate Head Screw St3.9×13	8		
9	BGB845-ST4.8×16	B18-ST4.8×16C-W7	Cross Small Plate Head Screw St4.8×16	10		
10	BGB845-ST4.8×13	B18-ST4.8×13C-W7	Cross recessed pan head tapping screw St4.8×13	2		
11	PJ00000903500300	90441-102-0001	Nut Holder M6×2	6		
12	PJ00000902250000	90161-118-0008	Socket Hexagon Flat Head Bolt M6×12	6		
13	P11500089100000O	89100-115-0000	Tool Kit	1		
14	PJ00000932450000	94058-118-0000	U-type Clamping Drawstring	1		
15	P11800082303000O	89822-118-0000	Sundry Box Cover	1		
16	PJ00000934200000	89828-118-0000	Sundry Box Sealing Strips	1		
17	P11600089102000O	89102-116-0000	Adjustment wrench, Shock Absorber	1		

ALL RIGHTS RESERVED
NORDIK MOTOR CANADA

FRONT BODY

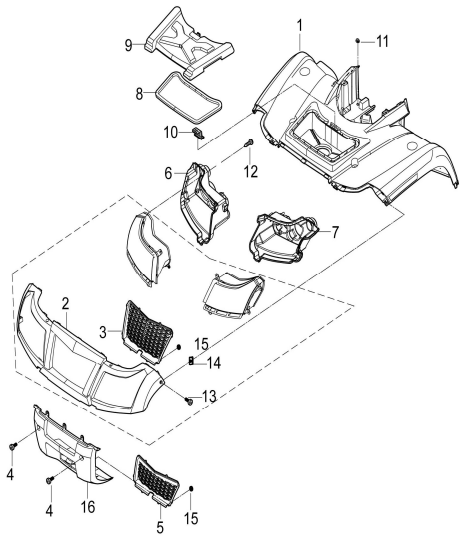

NO.	PART NO. (NEW)	PART N0. (OLD)	DESCRIPTION	Q'TY	PRICE	NOTE
1	P1180008220800033	83301-118-0001	Front Body Cover（Red）	1		
	P1180008220800070	83301-118-0002	Front Body Cover（Blue）	1		
	P1180008220800012	83301-118-0003	Front Body Cover(White)	1		
	P1180008220800022	83301-118-0004	Front Body Cover(Black)	1		
	P1180008220800062	83301-118-0007	Front Body Cover(Dark Green)	1		
	P1180008220800040	83301-118-0011	Front Panel: Orange	1		
	P1180008220800031		Front Panel: Dark Red	1		
	P1180008220800092	83301-118-0008	Front Body Cover(Green Camouflage)	1		
	P1180008220800093	83301-118-0010	Front Body Cover(Yellow Camo Vista Color）	1		
2	P1180008220100033	82501-118-0001	mounting plate，headlight	1		
	P1180008220100070	82501-118-0002	Mounting Plate，Headlight (Blue)	1		
	P1180008220100012	82501-118-0003	Mounting Plate，Headlight (White)	1		
	P1180008220100022	82501-118-0004	Mounting Plate，Headlight (Black)	1		
	P1180008220100062	82501-118-0007	Mounting Plate，Headlight (Dark Green)	1		
	P1180008220100040	82501-118-0011	Mounting Plate，Headlight (Orange)	1		
	P1180008220100031		Mounting Plate，Headlight (Red)	1		
	P1180008220100092	82501-118-0008	Mounting Plate，Headlight (Green Camouflag)	1		
	P1180008220100093	82501-118-0010	Mounting Plate，Headlight (Vista Camouflag)	1		
3	P1180008220500000	83312-118-0000	Air grid	1		
4	PJ0000090225010O	90161-101-0013	Socket Hexagon Screw M6×16	4		
5	P1180008222600000	35160-118-0000		1		
6	P1180008220300000	82552-118-0000	Mounting Plate, Front Right Headlight	1		
7	P1180008220200000	82551-118-0000	Mounting Plate, Front Left Headlight	1		
8	PJ0000093420000O	89828-118-0000	Sundry Box Sealing Strips	1		
9	P1180008230300000	89822-118-0000	Sundry Box Cover	1		
10	PJ0000093235000O	94056-118-0000	Sundry Box Drawstring	1		
11	PJ0000093135000O	94022-118-0000	shock pad，Adjustable card slot φ8×12	4		
12	BGB845-ST4.8×13	B18-ST4.8×13C-W7	Cross Small Plate Head Screw ST4.8×13	6		
13	PJ0000090225000O	90161-118-0008	Socket Hexagon Flat Head Bolt M6×12	4		
14	PJ0000090350030O	90441-102-0001	Nut Holder M6×2	12		
15	PJ0000090608000O	B21-3-BB	clipφ3	8		
16	P1180008210100000	73602-118-0000	Protective plate,front bumper	1		

ALL RIGHTS RESERVED
NORDIK MOTOR CANADA

HEADLIGHT

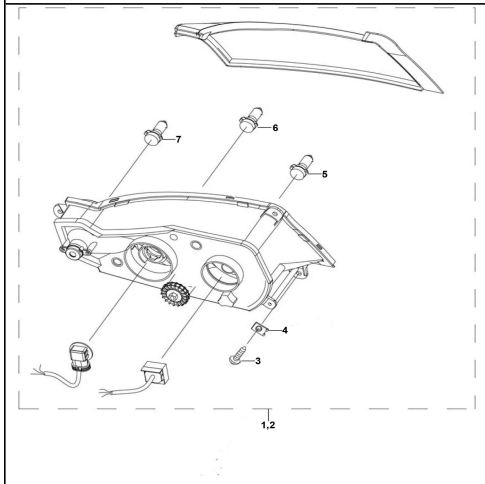

NO.	PART NO. (NEW)	PART N0. (OLD)	DESCRIPTION	Q'TY	PRICE	NOTE
1	P118000351100000	35160-118-0000	Left Headlight Assy	1		
2	P118000351300000	35180-118-0000	Right Headlight Assy	1		
3	PJ00000902250000	90161-118-0008	Socket Hexagon Flat Head Bolt M6×12	8		
4	PJ00000903500300	90441-102-0001	Nut Holder M6×2	8		
5	PJ0000038411000O	35163-119E-0000	Headlight Bulb Hs1;12V;35W/35W	2		
6	PJ00000384310000	35171-115-0000	Position Light Bulb 12V； W5W	2		
7	PJ00000384410000	35375-115-0000	Bulb, 12V R10W	2		

ALL RIGHTS RESERVED
NORDIK MOTOR CANADA

REAR TURNING LIGHT

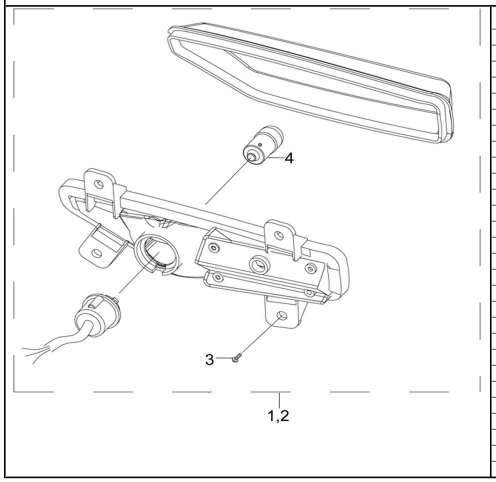

NO.	PART NO. (NEW)	PART N0. (OLD)	DESCRIPTION	Q'TY	PRICE	NOTE
1	P118000354500000	35410-118-0000	Rear Turning Light（L）	1		
2	P118000354750000	35430-118-0000	Rear Turning Light（R）	1		
3	BGB845-ST4.8×13	B18-ST4.8×13C-W7	Cross recessed pan head tapping screw St4.8×13	8		
4	PJ00000384410000	35375-115-0000	Bulb, 12V R10W	2		

ALL RIGHTS RESERVED
NORDIK MOTOR CANADA

DECALS & STICKERS

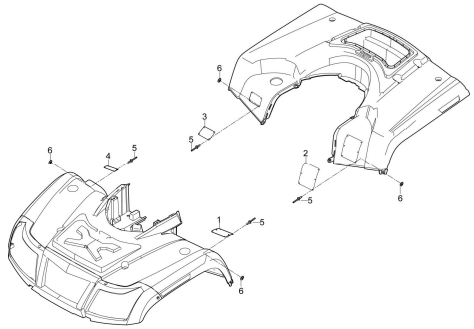

NO.	PART NO. (NEW)	PART N0. (OLD)	DESCRIPTION	Q'TY	PRICE	NOTE
1	P107F00091640000		Warning lable-tire pressure	1		
2	P107F00091630000		Warning lable-Age limit	1		
3	P107F00091620000		Warning lable- Persons capacity	1		
4	P107F00091610000		Warning lable-safe driving	1		
5	BGB12618-3.2×11	12618-3.2-12	Blind rivet φ3.2×11	20		
6	BGB97.1-3	B02-3-B7	Washer 3	20		

ALL RIGHTS RESERVED
NORDIK MOTOR CANADA

LOCKSET ASSY

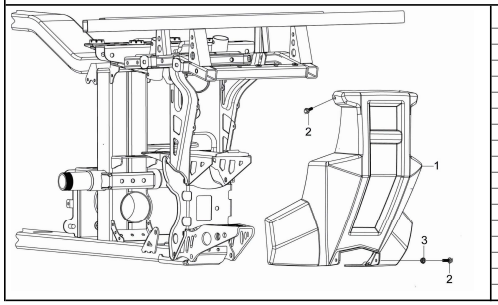

NO.	PART NO. (NEW)	PART N0. (OLD)	DESCRIPTION	Q'TY	PRICE	NOTE
1	P118000826000000	82353-118-0000	Rear Decorative cover	1		
2	BGB16674-M6×16	B05-M6×16-57	Hexagon Flange Bolt M6×16	4		
3	BGB6177.1-M6	B22-M6-27	Hexagon Flange Nut M6	2		

ALL RIGHTS RESERVED
NORDIK MOTOR CANADA

REAR MIRROR PART

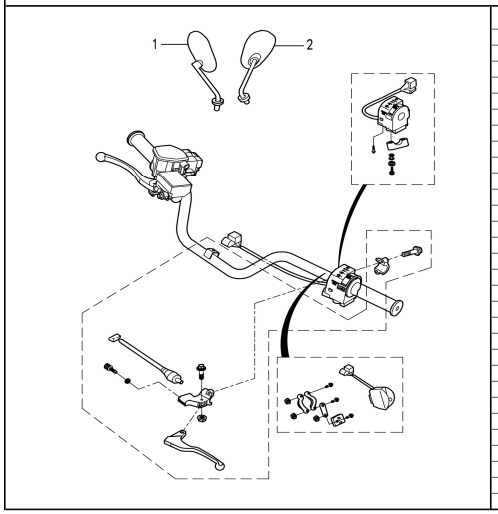

NO.	PART NO. (NEW)	PART N0. (OLD)	DESCRIPTION	Q'TY	PRICE	NOTE
1	P107000892100000	89210-107000-0100	Rearview Mirror (L)	1		
2	P107000892200000	89220-107000-0100	Rearview Mirror (R)	1		

ALL RIGHTS RESERVED
NORDIK MOTOR CANADA

DISC BRAKE PART

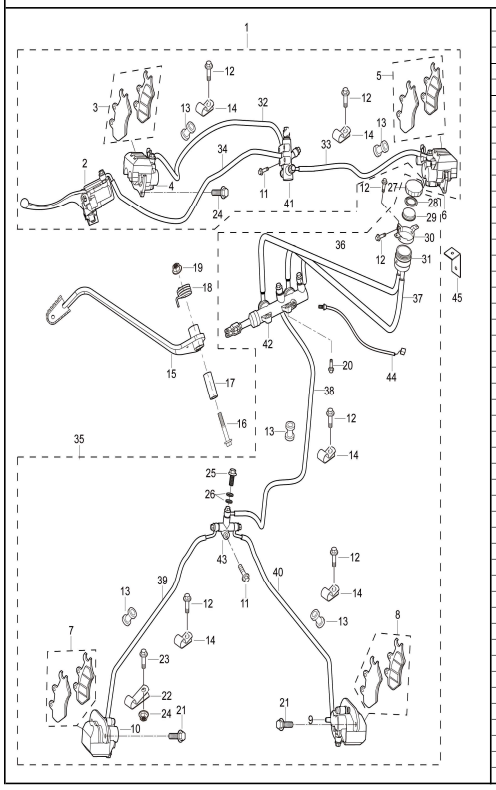

NO.	PART NO. (NEW)	PART NO. (OLD)	DESCRIPTION	Q'TY	PRICE	NOTE
1	P118000441000000		Brake Assy I	1		
2	P107000441700000	44130-107-0000	Front Disc Brake Pump	1		
3	P117000441120000		Front Brake Pad	1		
4	P118000441100000	44200-118-0000	Front Brake Caliper(L)	1		
5	P117000441120000		Front Brake Pad	1		
6	P1180004450A0000	44300-118-0000	Front Brake Caliper(R)	1		
7	P118000442110000		Left Rear Brake Pad	1		
8	P118000442210000		Right Rear Brake Pad	1		
9	P118000442200000		Rear Right Brake Caliper	1		
10	P118000442100000		Rear Left Brake Caliper	1		
11	BGB16674-M6×25	B05-M6×25-57	Hexagon Flange Bolt M6×25	5		
12	BGB16674-M6×12	B05-M6×16-57	Hexagon Flange Bolt M6×12	9		
13	P115000444580000	19035-115-0000	Oil Pipe Fixing Rubber Sleeve	11		
14	P115000444590000	44231-115-0000	Clip I,Oil Pipe	9		
15	P1180004311A0000	4311A-118-0000	Parking Pedal	1		
16	BGB16674-M10×1.25×60	B06-M10×1.25×60-57	Hexagon Flange Bolt M10×1.25×60	1		
17	PJ0000092900320	90693-118-1037	Bushing Φ10.5×Φ16×40	1		
18	P118000431010000	95082-118-0010	Torsion Spring,Pedal Brake	1		
19	BGB6187-M10×1.25	B10-M10×1.25-27	Hexagon Flange Locked Nut M10×1.25	1		
20	BGB16674-M8×25	B05-M8×25-57	Hexagon Flange Bolt M8×25	2		
21	BGB16674-M10×1.25x22	B06-M10×1.25×22-57	Hexagon Flange bolt M10×1.25×22	8		
22	P115000444610000		Clip II,Oil Pipe	2		
23	BGB16674-M6×16	B05-M6×16-57	Hexagon Flange Bolt M6×16	8		
24	BGB6177-M6		Hexagon Flange Nut M6	4		
25	P115000440010000	44001-115-0000	Oil Pipe Bolt I	16		
26	P115000440020000	44004-115-0000	Gasket,Oil Pipe	32		
27	P115000440030000		Disc Brake Oil Cup Cover	1		
28	P115000440040000		Paper Gasket I, Oil Cup	1		
29	P115000440050000		Paper Gasket Ii, Oil Cup	1		
30	P115000440060000		Bracket, Oil Cup	1		
31	P115000440070000		Disc Brake Oil Cup	1		
32	P118000441300000	44410-118-0000	Front Oil Pipe(L)	1		
33	P118000441400000	44430-118-0000	Right Front Oil Pipe	1		
34	P118000442300000	44533-118-0000	Middle Oil Pipe	1		
35	P118000442000000		Brake Assy II	1		
36	P118000440090000		Oil Pipe I	1		
37	P118000440110000		Oil Pipe Ii	1		
38	P118000440120000	**44532-118-0000**	Oil Pipe(Connect Triplet And Main Pump)	1		
39	P118000442400000		Rear Oil Pipe L	1		
40	P118000442500000		Rear Oil Pipe R	1		
41	P107000441600000		Proportional Valve	1		
42	P118000441800000	44520-118-0000	Main Pump	1		
43	P115000440080000	45401-115-0100	Tee Joint,Oil Pipe	1		
44	P118000376200000		Rear Brake Light Switch	1		
45	P118000516230000	54247-118-0000	Mounting Bracket, Brake	1		

ALL RIGHTS RESERVED
NORDIK MOTOR CANADA